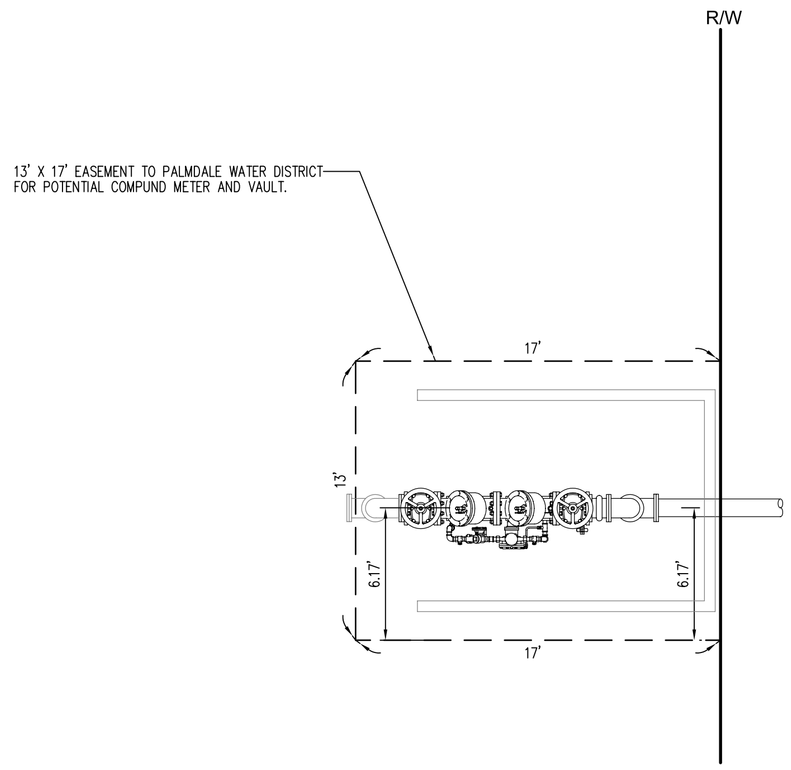

PLAN

SCALE: 1" = 5'

NOTES:

1. SCREEN WALL, IF REQUIRED, MUST BE LOCATED OUTSIDE DISTRICT EASEMENT. NO JOINTS WITHIN 2' OF FOOTING EDGE.
2. REDUCUED-PRESSURE PRINCIPLE DETECTOR ASSEMBLY TO BE MAINTAINED BY OWNER/DEVELOPER. BYPASS METER OWNED AND MAINTAINED BY THE DISTRICT.

SCALE: 1" = 5'

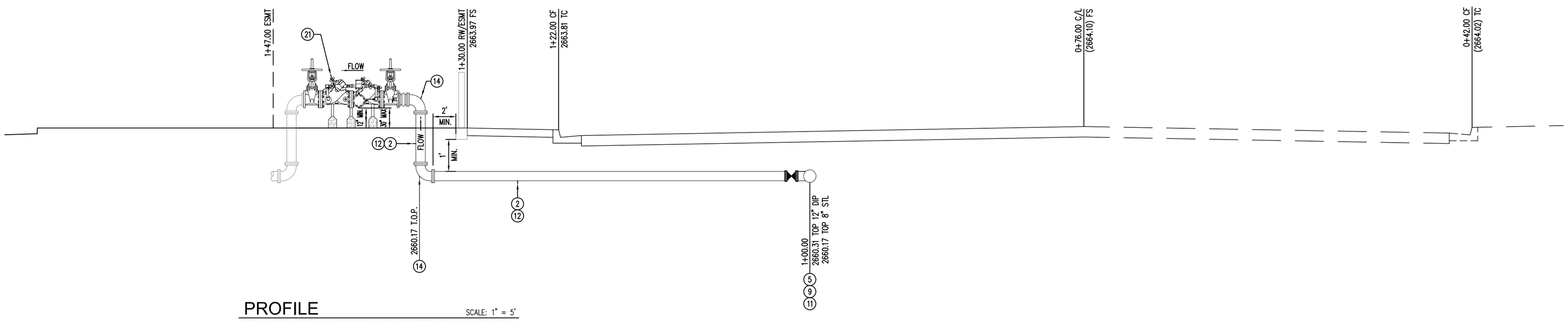

PROFILE

SCALE: 1" = 5'

REDUCED PRESSURE PRINCIPLE DETECTOR ASSEMBLY

NO.	REVISIONS	DATE	BY

DEVELOPER INFO
NAME, ADDRESS, PHONE

REGISTERED CIVIL ENGINEER STAMP

ENGINEERING FIRM INFORMATION
NAME, ADDRESS, PHONE, FAX, ETC.

NAME DATE

PALMDALE WATER DISTRICT

APPROVED BY:

PALMDALE WATER DISTRICT DATE

WATER SYSTEM IMPROVEMENTS

RPDA DETAIL
BRENTWOOD WAY
@ 13+58.14

WSM NO. 46-87 | PM NO. 81770 | SHEET: 5 OF 5